Issue #5
November 1984

Ve Zee News

Registered By Australian Post
Publication No. SBG0711

Return Address
30 Seventh ave. Cheltenham S.A. 5014

Welcome to issue 5 of our newsletter and with this issue I am starting a new service that I hope you will find helpfull. All the large programs in this issue (and the World Times program from last month) are available on tape. That should save some time for all you one finger typists out there.

The cost is $5 including postage. This service will be available for all future programs provided the author gives his/her permission. To help me in this area would you please include a note with each program saying that you do (or do not) want your contribution supplied on tape.

```
10 CLS:COLOR,0
20 PRINT@39,"*** MATH ADD ***"
22 PRINT:PRINT:PRINT:PRINT"   DO YOU WANT INSTRUCTIONS?"
23 PRINT:PRINT:PRINT:PRINT:PRINT"        (Y=YES   N=NO)"
24 K$=INKEY$
25 I$=INKEY$:IFI$=""THEN25
26 IF I$="N"THENCLS:GOTO86ELSE30
30 CLS:PRINT:PRINT"IN MATH ADD THE WHOLE SCREEN IS USED. ";
35 PRINT"WHEN YOU PLAY KEEP YOUR   EYES ON THE SCREEN AS THE ";
40 PRINT"      PROBLEMS TO ANSWER AREN'T DIS-  PLAYED FOR ";
45 PRINT"LONG, BEFORE YOU ARE ASKED FOR THE ANSWER. ";
50 PRINT"WHEN YOU  ANSWER DON'T PRESS RETURN UNTIL YOU ARE ";
55 PRINT"READY FOR THE NEXT      PROBLEM. AFTER YOU GIVE THE "
60 PRINT"CORRECT ANSWER YOUR SCORE IS    GIVEN AND I'LL GIVE ";
65 PRINT"YOU ANOTHER."
66 PRINT"  PRESS >>SPACE<< TO CONTINUE"
67 K$=INKEY$
68 I$=INKEY$:IF I$<>" "THEN 68
69 CLS
70 PRINT"THE HIGHER YOUR SCORE THE       SHORTER THE TIME OF ";
75 PRINT"DISPLAYING  YOUR PROBLEM ON THE SCREEN. ";
80 PRINT"IF  YOU GET ONE WRONG THE GAME ENDS,BUT I'LL GIVE ";
85 PRINT"YOU THE CORRECT   ANSWER."
86 PRINT:PRINT:PRINT:PRINT"KEEP YOUR EYES ON THE SCREEN ";
87 PRINT"   BECAUSE HERE WE GO....."
88 PRINT:PRINT:PRINT"   PRESS >>SPACE<< TO START"
90 K$=INKEY$
95 I$=INKEY$:IF I$<>" "THEN 95
100 REM"MATHS ADD"
110 COLOR,1
115 P=0:W=0
120 G=350
130 CLS
140 A=RND(20)
150 B=RND(20)
160 PRINT@RND(15)*32+RND(23),A"+"B
170 FOR T=1 TO G
180 NEXT T
190 CLS
200 G=G-5
210 IF G<50 THEN G=50
215 PRINT
220 INPUT " ANSWER";C
230 PRINT
240 IF C=A+B THEN PRINT " RIGHT.":P=P+1
250 PRINT
260 PRINT " SCORE"P:PRINT:PRINT:PRINT:PRINT
270 IF C<>A+B THEN 311
280 FOR T=1 TO 500
290 NEXT T
300 GOTO 130
311 SOUND 16,3
312 SOUND 11,2
313 SOUND 11,1
314 SOUND 13,3
315 SOUND 11,3
316 SOUND 0,2
317 SOUND 15,4
318 SOUND 16,4
319 W=W+1:PRINT" YOU SAID"C"   BUT"A"+"B"="A+B:PRINT:PRINT
320 PRINT"        THAT'S";P*100/(P+W);"PERCENT":PRINT:PRINT
323 PRINT " GAME OVER. WHY NOT TRY AGAIN?";
325 PRINT:PRINT"        (Y=YES   N=NO)"
326 K$=INKEY$
327 I$=INKEY$:IFI$=""THEN327
328 IFI$="Y"THEN115
329 IFI$="N"THEN350
330 IFI$<>"Y"THEN327
331 IFI$<>"N"THEN327
350 CLS:END
```

Ron Carson

HELP

Most of the contents of Ve Zee News to date have come from a core of regular contributers, I would like to hear from the rest of you.

I am particularly short of small items, notes and tips etc. These are both interesting to other readers and helpfull to me because they can fill in the gaps between large programs, thus making layout easier

There must be some of you who feel that they are not advanced enough to contribute programs but that is not the case. Remember that no matter what your level of expertise, there are others with less who would find your programs and hints most helpfull.

Remember also that I will assume that the contents of Ve Zee News is meeting your needs unless I hear otherwise. If you have any suggestions or comments about the format or contents then let me know.

****

Next Month

My notes on the contents of next months issue are often not correct but here are my "predictions" for December.

* Another hardware mod. this time a ROM/RAM card to use the spare 10K in the VZ memory map.
* Some notes and a small routine to make the double precission multiplication give the correct results (haven't you noticed they are often wrong?)
* A program to calculate direction and distance of radio Hams from QSL numbers

And much more

****

ARE YOU INTO BIORHYTHMS ? WHAT NEVER HEARD OF THEM ?.....
WELL IT SEEMS THAT FROM THE DAY WE ARE BORN THREE CLOCKS START
AND MEASURE OUR ESSENTIAL FUNCTIONS.
YOUR PHYSICAL CLOCK HAS A 23 DAY CYCLE
YOUR EMOTIONAL CLOCK HAS A 28 DAY CYCLE
YOUR INTELLECTUAL CLOCK HAS A 33 DAY CYCLE
AS THEY ALL START TOGETHER ON DAY 1 THEY SOON GET OUT OF
PHASE. THE CYCLES ARE SHOWN AS SINE WAVES MOVING ABOVE AND
BELOW A CENTRAL AXIS OF TIME. WHEN IT IS ABOVE IT IS ACTIVE
AND WHEN IT IS BELOW IT'S PASSIVE. THE CRITICAL DAYS ARE WHEN
THE CURVE CROSSES FROM HIGH TO LOW AND VICE VERSA. IF ALL
THREE CROSS TOGETHER JUST DON'T GET OUT OF BED..
THE CHART GIVES YOU YOUR BIORHYTHMS FOR THE NEXT 5 WEEKS.
EACH BAR IS EQUAL TO ONE WEEK STARTING FROM TODAY.....
NOTE. LINE 911 HAS AN ON STATEMENT AND IS TO BE THE FIRST LINE
ENTERED. SEE VE VEE NEWS NO 3 PAGE 4.
LINE 912 HAS THE DATA FOR LINE 911 AND CAN BE LEFT OUT OF THE
PROGRAM WHEN YOU ENTER IT.

```
100 CLS:PRINT@10,'BIORHYTHM CLOCK':PRINT
110 PRINT'I WILL NEED SOME DATES FROM YOU,ENTER THEM BY NUMBERS'
120 PRINT' ALWAYS ENTER THE COMPLETE FOUR DIGIT YEAR'
150 PRINT'EACH INPUT ELEMENT SHOULD BE SEPERATED FROM THE NEXT'
160 PRINT'BY A COMMA(,)':PRINT
165 INPUT'ENTER DAY OF THE WEEK (SUN=1, MON=2, SAT=7)',I
170 INPUT'ENTER TODAYS DATE(DD,MM,YYYY)  ',A,B,C
190 PRINT:INPUT'ENTER YESTERDAYS DATE(DD,MM,YYYY)  ',D,E,F
200 PRINT:INPUT'ENTER YOUR BIRTHDATE(DD,MM,YYYY)  ',G,H,J
205 INPUT'ENTER YOUR NAME, PLEASE',A$
210 IF (B=E)*(A<>D+1)+(J>C)+(J>F)+(A>31)+(D>31)+(G>31)THEN 250
220 IF (I>7)+(B>12)+(E>12)+(H>12)+(B<>E)X(A<>1) THEN 250
230 GOTO 260
250 PRINT TAB(5),'INPUT ERROR TRY AGAIN .':GOTO165
260 IF F-J<2 THEN PRINT'BIRTHDATE TOO CLOSE FOR ACCURACY'GOTO170
270 IF F-J>600 GOSUB 710:GOTO 170
300 REM DAYS IN FULL YEARS BETWEEN BIRTH AND YESTERDAY
310 Q=(F-1)-(J+1):GOSUB 2000:Y=(Q*365)+Z:IF Y<0 THEN Y=0
350 R=0:S=E-1:T=1:IF S=0 THEN Q=0:GOTO 370
360 GOSUB 900:IF (F/4=INT(F/4))*(E>2)THEN Q=Q+1
370 W=Q+D:REM W=£ DAYS FROM BEGINING THIS YEAR TO YESTERDAY
400 R=H:S=12:T=H+1:IF T=13 THEN 430
410 GOSUB 900:V=Q:IF(J/4=INT(J/4))*(H<3)THEN V=V+1
430 R=H-1:S=1:T=1:GOSUB 900
435 V=V+(Q-G):REM V=£ DAYS FROM BIRTH DATE TO YESTERDAY
440 U=V+W+Y
450 Q=U/23:K=INT(((Q-INT(Q))X23)+.5)
460 Q=U/28:L=INT(((Q-INT(Q))X28)+.5)
470 Q=U/33:M=INT(((Q-INT(Q))X33)+.5)
482 RESTORE:FOR N=0TO6:READ D$(N):NEXT
483 H=H-2
484 IF H>0 THEN 486
485 H=H+12:J=J-1
486 Z=INT(J/100):J=J-Z*100
487 T=INT((13*H-1)/5)+INT(J/4)+INT(Z/4)+G+J-2*Z
488 R=T-7*INT(T/7):B$=D$(R)
495 CLS:PRINT A$,',YOU'VE BEEN AROUND FOR '
497 PRINT U'DAYS'
498 PRINT'YOU WERE BORN ON A  ',B$
499 GOSUB 800
500 MODE(1):COLOR4
510 FORX=10TO115STEP21:FORY=5TO27:SET(X,Y):NEXT:NEXT
520 Y=16:FORX=10TO115:SET(X,Y):NEXT
550 O=11.5:P=K:R=1/3:T=23:COLOR2:GOSUB3000
600 O=14:P=L-1:R=1/3:T=28:COLOR3:GOSUB3000
650 O=16.5:P=M-3:R=1/3:T=33:COLOR4:GOSUB3000
700 X$=INKEY$:K$=INKEY$:IF K$<>' 'THEN 700 ELSE 200
800 PRINT:PRINT'PHYSICAL (YELLOW) CURVE LASTS   FOR 23 DAYS.'
810 PRINT'TODAY IT'S AT DAY £',K+1
820 PRINT:PRINT'EMOTION (BLUE) CURVE LASTS FOR  28 DAYS.'
830 PRINT'TODAYS IT'S AT DAY £',L+1
840 PRINT:PRINT'MIND (RED) CURVE LASTS 33 DAYS.'
850 PRINT'TODAY IT'S AT DAY £',M+1
855 PRINT' PRESS >>>SPACE<<< TO CONTINUE'
860 K$=INKEY$:Q$=INKEY$
870 IF Q$<>' 'THEN860 ELSE RETURN
```

by R. Davis

```
900 REM CALCULATE DAYS IN INCOMPLETE YEAR SUB
910 Q=0:FOR N=T TO S:R=R+1
911
912 REM ONRGOTO 931,928,931,930,931,930,931,931,930,931,930,931
925 NEXT:RETURN
928 Q=Q+28:GOTO 925
930 Q=Q+30:GOTO 925
931 Q=Q+31:GOTO 925
950 DATA SUNDAY,MONDAY,TUESDAY,WEDNESDAY,THURSDAY
960 DATA FRIDAY,SATURDAY

2000 REM ADJUST FOR LEAP YEAR SUB
2010 Z=INT((Q+3)/4):IF J+1>1900THENRETURN
2020 R=INT((J+19/100):FORN=19TO0STEP-1:IFR=NTHEN2050
2030 NEXT
2050 IF R*100=J+1 THEN R=R-1
2060 IF J+1>1600 THEN Z=Z-(19-R):RETURN
2070 IF J+1>1200 THEN Z=Z+1-(19-R):RETURN
2080 IF J+1>800 THEN Z-Z+2-(19-R):RETURN
2090 IF J+1>400 THEN Z=Z+3-(19-R):RETURN
2095 Z=Z+4-(19-R):RETURN
3000 REM CALCULATE AND DRAW SUB
3100 FORN=11TO114:P=P+R:IFP>TTHENP=1
3200 X=(P*180)/0:X=INT(X+.5)
3201 IFX>=180THENX=X-180:X=-X
3400 X=X/57.29578
3440 Y=X-X***X/6+X*****X/120-X*****X/5040
3450 Y=Y+X*********X/362880
3460 X=N:Y=INT((YX(-10))+.5)+16:SET(X,Y):NEXT:RETURN
```

HEX CONSTANTS

```
8

1 POKE30897,190:POKE30898,175:CLEAR100
2 ' -----HEX CONSTANTS---------
3 ' ORIGINAL TRS-80.MODI/LII-
4 '          BY
5 '    ROGER BOWLER (1981)
6 '    MODIFIED FOR V8200
7 '    L.A.VILLANI. (1984).
8 ' ALLOWS DIRECT ENTRY OF HEX
9 ' IN THE FORMAT--&H1234
10 ' ---------------------------
11 ' THE PROGRAM IS SELF-NEWING
12 ' ---------------------------
14 ' CHANGE LINE 1 TO RELOCATE
15 ' TOP OF MEMORY POINTER
16 POKE31125,191:POKE31126,175
18 LB=-20544
20 FORI=1TO59
25 READA
30 POKELB,A
35 LB=LB+1
40 NEXTI
45 NEW
50 END
60 DATA 215,207,72,06,04,17,00,00126,254
,48,56,31,254,58,56,10
65 DATA 254,65,56,23,254,71,48,19,214,07
,230,15,72,06,04,203,35
70 DATA 203,18,16,250,179,95,65,215,16,2
20,120,254,04,210,151
75 DATA 25,237,83,33,121,62,02,50,175,12
0,201
```

© John Waters November 1984
All material in Ve Zee News is subject to copyright. Contributed programs are reproduced with permission and on the understanding that they are for the private use of subscibers only. Copyright is retained by the author.

FOR EXAMPLE :-
ENTER

```
PRINT&H7000    <RET>
28672

PRINT&H7000+&H2000    <RET>
36864

PRINT&H0010*&H0010    <RET>
256

PRINT&H000A*&H000A    <RET>
100

PRINT&HC000    <RET>
-16384
```

DIVISION ALSO WORKS

```
                *** ASSEMBLER TUTORIAL #3 ***

          ;TASK:  Write a programme to clear the contents of
          ;       memory from 7000H to 7050H.
          ;POINTS:
          ;       If a loop is used, it would need to loop 50H
          ;       (80) times, if we use an 8 bit LD instruction.
          ;       If we use a 16 bit LD, then we get 2 bytes
          ;       each time, and the loop would need to be
          ;       40 times.
          ;
          ;       The A register may be loaded with the loop
          ;       value of 80  and at the end of each loop the
          ;       instruction DEC A performed.  However there
          ;       is a better way. The B register is the only
          ;       one to have the special command DJNZ  e, which
          ;       means  Decrement B, and jump relative if B
          ;       not yet zero.
          ;
          ;       We may use HL as the memory address pointer
          ;       that is;  load HL with the start address we
          ;       want filled or zeroed.  NO brackets round the
          ;       value!  Brackets mean LD the register with the
          ;       byte CONTAINED in that address (like F0), not
          ;       the address number. (If a 16 bit register like
          ;       HL, with  brackets, the next byte is loaded
          ;       in too.....).
          ;
          ;       Finally, since the AF register is  the one
          ;       most endowed with instructions, especially
          ;       direct and relative addressing, lets use that
          ;       register to load that desired value
          ;       into memory.
          ;
          ;       The following are two programmes to load those
          ;       80 (50H) addresses with the desired value.
          ;       I have deliberately chosen the screen memory
          ;       addresses so we can see the result.
          ;
9000              ORG 9000H
9000 0650         START   LD B,80          ;SET LOOP COUNTER (80)
9002 210070               LD HL,7000H     ;1ST ADD. TO BE FILLED
9005 AF                   XOR A
9006 77           LOOP    LD (HL),A       ;LOAD VALUE IN A INTO
                                          ;MEMORY (7000H)
9007 23                   INC HL          ;INCREASE HL
9008 10FC                 DLNZ LOOP       ;DECREMENT B BY 1 & IF
                                          ;NOT 0, JUMP BACK TO
                                          ;LOOP REPEAT TILL 0.
900A C9                   RET             ;GO BACK TO ORIGIN
          ;
          ;               END
          ;
          ;NOW    for another way of doing the same thing.  This
          ;       time we will use the same registers for the
          ;       same steps......
          ;
9000              ORG     9000H
9000 0650         START   LD B,50H        ;SAME AS 80 DECIMAL
```

```
9002 210071              LD HL,7100H      ;CHANGE START ADDRESS
9005 3E40                LD A,'@'         ;SEE THE ASSEMBLERS
                                          ;TRANSLATION OF
                                          ;ASCII TO HEX
9007 77          LOOP    LD (HL),A
9008 23                  INC HL           ;AS BEFORE
9009 05                  DEC B            ;NOT AS NEAT AS DJNZ!
900A 20FB                JR NZ,LOOP       ;MEANS JUMP BACK TO
                                          ;LOOP IF B NOT 0.
900C C9                  RET
900D                     END
```

These are two very simple M/C routines and the address 7000H is the start of your screen.

As they stand, what limitations are there? First the maximum number you can fit in an 8 bit register like B, is 255. This then is the maximum number of characters or blanks you may print on the screen at any one time. (That's not strictly true. Try loading B with 00H in the first line of the programme and see the number of characters printed.

Second, a knowledge of the routines available through the monitor will reveal that a similar routine is already in ROM. There would be no way to perform the formfeed, the standard ASCII '0CH' (or 12dec.) code otherwise! What else is the CLS command but this?

Therefore a screenclear or form feed may be carried out during a M/C programme this way :-

```
;        Preceeding M/C Programme ................

3E0C     LD A,0CH          ;LOAD A WITH FORMFEED
47       LD B,A            ;TRANSFER CONTENTS OF A TO B REGISTER
CD3A03   CALL 033AH        ;DISPLAY
                           ;REMEMBER THIS PRINTS A SINGLE CHAR.
                           ;ON THE VDU, & THE CHAR. MUST BE
                           ;PASSED THRU' B REGISTER.
C9       RET
```

I HOPE THIS AND SUBSEQUENT SHORT ROUTINES HELP THOSE OF YOU WHO HAVE SOUGHT HELP IN THE RUDIMENTS OF M/C PROGRAMMING.
IF THER ARE SPECIAL MATTERS YOU WISH REVIEWED, LET US KNOW, OTHERWISE WE WILL TAKE IT YOU ARE SATISFIED WIH WHAT YOU ARE GETTING OR HAVE GIVEN UP ON TRYING TO UNDERSTAND MACHINE CODE.

These two short routines from Steve Debreceny may be of use to readers interested in decimal-binary-decimal conversions.

Dec to Binary

```
10 B$="":INPUT"ENTER DECIMAL VALUE";D
12 B=D/2:D=INT(B):IFB=DTHENB$="0"+B$ELSEB$="1"+B$
14 IFD>0THEN12ELSEPRINT"BINARY EQUIV. = ";B$:PRINT:GOTO10
```

Binary- Dec.

```
10 D=0:INPUT"ENTER BINARY NO.";B$
12 FORI=LEN(B$)TO1STEP-1:IFMID$(B$,I,1)="1"THEND=D+2^(LEN(B$)-I)
14 NEXT:PRINT"DECIMAL EQUIV. =";D:PRINT:GOTO10
```

THERE HAVE BEEN QUITE A FEW LOTTO NUMBER SELECTORS WRITTEN FOR ALL KINDS OF COMPUTERS. BUT WHAT THIS PROGRAM DOES IS TO LET YOU INPUT THE WINNING NUMBERS EACH WEEK AND SAVE THEM AS DATA ON TAPE AND RELOAD THEM TO SEE WHICH NUMBERS COME UP THE MOST OVER A PERIOD OF TIME.
WHEN YOU RUN THE PROGEAM THE FIRST TIME YOU WON'T HAVE ANY DATA ON TAPE SO GO TO INPUT NEW NUMBERS
LINE 80 LETS YOU CHECK IF THE NUMBERS ARE CORRECT IF NOT GOES BACK TO LINE 50 TO INPUT THE CORRECT ONES ELSE LOADS A ONE(1) INTO C(1)-C(40) DEPENDING ON THE WINNING NUMBERS. YOU THEN SAVE THESE ON TAPE AS DATA IN LINE 200. THEN NEXT WEEK LOAD THIS DATA BACK TO UPDATE WITH THE NEW NUMBERS.

R. Davis

```
5 DIM C(40):CLS
10 PRINT'TATSLOTTO NUMBERS':PRINT
20 INPUT'DO YOU WANT TO LOAD FROM FILE.   Y OR N',A$
30 IF A$='N' THEN 48
35 PRINT'PRESS PLAY ON RECORDER'
40 FOR N=1 TO 40:INPUT£'LOTTO',C(N):NEXT
45 PRINT'STOP RECORDER':FOR N=1 TO 10:SOUND1,3:NEXT
46 GOSUB 125
48 PRINT:PRINT'PLEASE ADD NEW NUMBERS TO LIST'
50 FOR N=1 TO6
60 INPUT A:B(N)=A
70 NEXT
80 INPUT'ARE THESE NUMBERS CORRECT ?',A$
90 IF A$='N'THEN 50
100 FOR N=1 TO 6
110 C(B(N))=C(B(N))+1
120 NEXT:GOSUB125:GOTO160
125 CLS
130 FOR N=1 TO 20:PRINT N' 'C(N),:NEXT
140 INPUT'PRESS RETURN TO CONTINUE',A$
150 FOR N=21 TO 40:PRINT N' 'C(N),:NEXT:RETURN
160 PRINT:INPUT'DO YOU WANT TO SAVE ON FILE.   Y OR N',A$
170 IF A$='N' THEN END
180 PRINT'PRESS RECORD ON RECORDER'
190 FOR N=1 TO 2000:NEXT
200 FOR N=1 TO 40:PRINT£'LOTTO',C(N):NEXT
210 FORN=1 TO 10:SOUND 2,4:NEXT
220 PRINT'STOP RECORDER'
230 GOTO 10
```

NOTE £-# note £ = #

This short program from David Hatt is a subroutine to draw circles on the TV screen. The ratio of variables "A" and "B" in line 20 may need to be changed to get a perfect circle on different TV sets and monitors. David found that the ratio of 3 to 2 was correct for his. By making "A" and "B" larger or smaller the circle size will change (remember to keep the ratio the same).

Although it slows down the speed greatly the definition of the circle can be changed by making the STEP .1 in line 1000 into a STEP .01. The position of the circle can be changed with variables "D" and "E" in line 20.

If the following line is added the circle will be filled in

```
1060 IF A>0 THEN A=A-1:B=B-1:GOTO 1000
```

and an interesting effect can be seen by adding

```
1055 COLOR(RND(4))
```

with the above line.

```
10 PI=355/113:MODE(1)
20 A=30:B=20:D=63:E=31
30 GOSUB 1000:SOUND 15,1
40 GOTO 40
1000 FOR C=0TO2*PI STEP .1
1010 X=INT(D+A*COS(C))
1020 Y+=INT(E+B*SIN(C))
1030 IF X>127 OR X<0 OR Y>63 OR Y<0 THEN 1050
1040 SET(X,Y)
1050 NEXT C
1070 RETURN
```

VZ-200 MEMORY Extension USING 6116 RAMS.

memory chips 1—6
9ØØØ H to BFFF
chips 7—14
CØØØ to FFFE

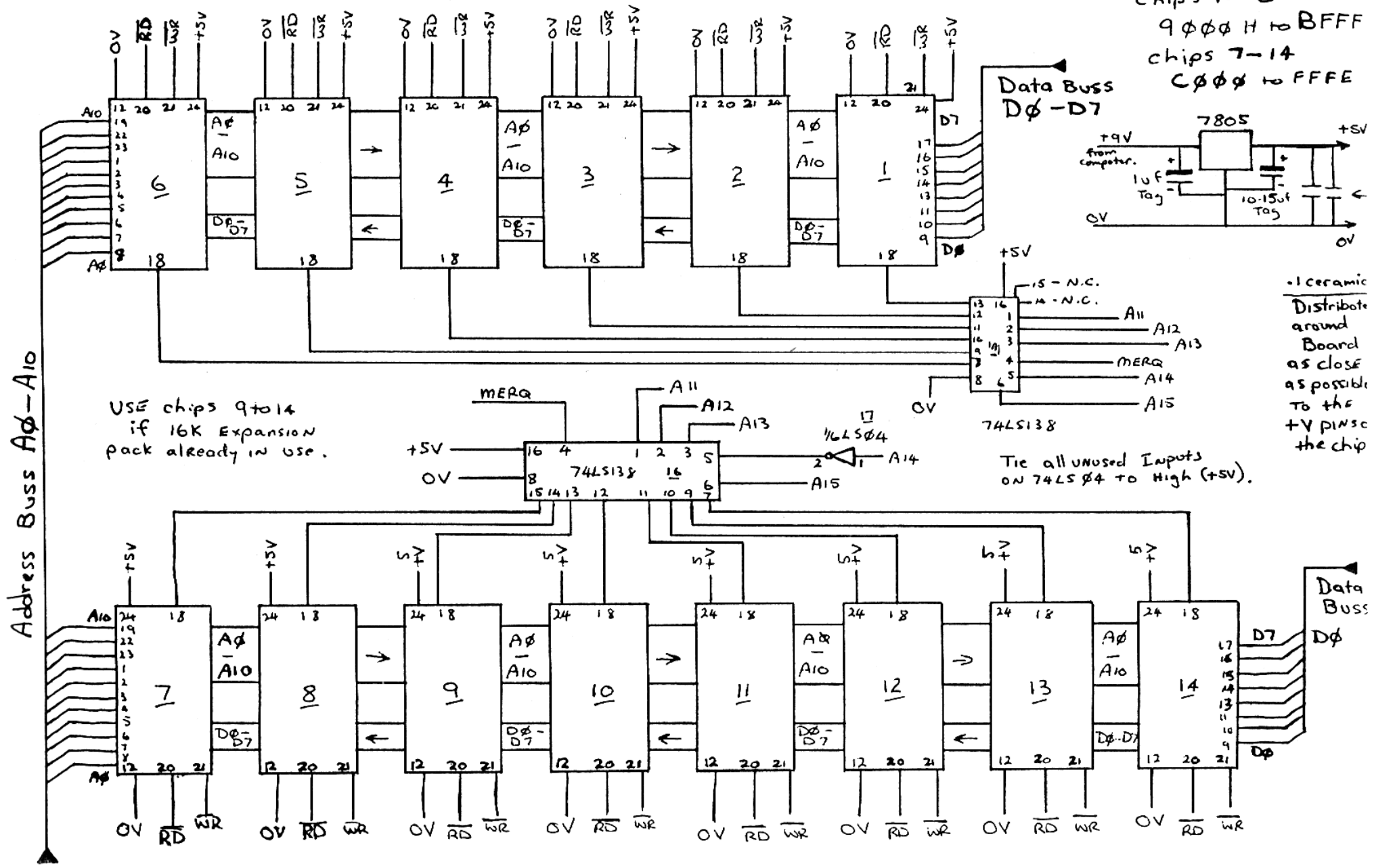

V.Z. RAM EXPANSION

By D. Boyce and L. Villani.

Not much to be said, diagram says it all. see page 7

Just some points. This expansion takes off where the basic machine finishes and takes it up to 64 k.,if you wish, starting with 2k and adding 2k or more as finances permit.

The CMOS 6116 were used over the 4116 to avoid multi-rail supplies and also to provide battery backup and/or write protect if needed and of course, it saves 'juice' therby sparing, what could become a very much overworkded P.S.U.

```
3 CLS:COLOR,1:PRINT@170,"FOR VZ-200"
4 PRINT@201,"BY R. CARSON":PRINT@235,"ADELAIDE"
5 PRINT@33,"***THE GAME OF BATTLESHIPS***":REM COPYRIGHT
6 PRINT@425,"INSTRUCTIONS?":PRINT@456,">>Y=YES  N=NO<<"
7 K$=INKEY$
8 I$=INKEY$:IF I$=""THEN8
9 IF I$="Y"THEN 12
10 IF I$="N"THEN90
11 IF I$<>"Y"THEN7:IF I$<>"N"THEN7
12 CLS:PRINT"THE PLAYING AREA REPRESENTS AN  ";
13 PRINT"AREA OF SEA. THE COMPUTER IS    ";
14 PRINT"CONTROLLING TEN SHIPS, A BATTLE-";
15 PRINT"SHIP, 2 CRUISERS, 3 DESTROYERS  ";
16 PRINT"AND 4 SUBMARINES. OF COURSE, I  ";
17 PRINT"CAN'T TELL YOU WHERE THEY ARE,  ";
18 PRINT"ONLY THE COMPUTER KNOWS, UNTIL  ";
19 PRINT"YOU HIT THEM. THE SHIPS ARE     ";
20 PRINT"DIFFERENT SIZES, AND ARE IDENTI-";
21 PRINT"FIED BY THE INITIAL LETTER. THE ";
22 PRINT"BATTLESHIP OCCUPIES FOUR SQUARES";
23 PRINT"LIKE THIS: BBBB, ACROSS OR DOWN."
24 PRINT:PRINT"   PRESS <SPACE> TO CONTINUE"
25 K$=INKEY$
26 I$=INKEY$:IF I$<>" "THEN 26
32 CLS:PRINT"THE CRUISERS THREE SQUARES, THE ";
33 PRINT"DESTROYERS TWO SQUARES, AND THE ";
34 PRINT"SUBMARINES ONE SQUARE, ALWAYS IN";
35 PRINT"A STRAIGHT LINE. SHIPS MAY TOUCH";
36 PRINT"OR LAY ALONGSIDE EACH OTHER.YOU ";
37 PRINT"FIRE A SHOT BY GIVING TWO       ";
38 PRINT"NUMBERS. THE FIRST ON THE LEFT, ";
39 PRINT"THE SECOND AT THE TOP. IF YOU   ";
40 PRINT"HIT ANYTHING, A LETTER WILL BE  ";
41 PRINT"PRINTED TO TELL YOU WHICH TYPE  ";
42 PRINT"OF SHIP YOU HIT. TO SINK IT, YOU";
43 PRINT"MUST HIT ALL THE SQUARES OF     THAT ";
44 PRINT"PARTICULAR SHIP."
45 PRINT:PRINT"   PRESS <SPACE> TO CONTINUE"
46 K$=INKEY$
47 I$=INKEY$:IF I$<>" "THEN47
52 CLS:PRINT"IF YOU MISS, THEN * IS PRINTED  ";
53 PRINT"TO REMIND YOU THAT YOU HAVE SHOT";
54 PRINT"INTO THAT SQUARE BEFORE."
55 PRINT:PRINT"YOUR NUMBER OF SHOTS IS SHOWN AT";
56 PRINT"THE BOTTOM OF THE SCREEN AND THE";
57 PRINT"BEST SCORE YOU ACHIEVED DURING A";
58 PRINT"SERIES OF GAMES. THE GAME ENDS  ";
59 PRINT"WHEN ALL SHIPS HAVE BEEN SUNK."
60 PRINT:PRINT:PRINT"          HAPPY HUNTING"
61 PRINT:PRINT:PRINT"     PRESS <SPACE> TO START"
62 K$=INKEY$
63 I$=INKEY$:IF I$<>" "THEN 63
90 CLS
95 X=0
100 A=100
110 DIM G(100)
120 D=0
125 CLS:PRINT@196,"WAIT---ARRANGING FLEET"
130 C=0
140 FOR B=1 TO 100
150 G(B)=0
160 NEXT B
170 E=4
180 F=1
190 H=INT(RND(X)*2)
195 W=0
200 IF H=0 THEN J=RND(9)
202 IF H=1 THEN J=RND(4)
205 IF H=1 THEN K=RND(9)
212 IF H=0 THEN K=RND(4)
220 L=0
230 P=10*J+K
250 FOR M=0 TO (E-1)
255 IF H=0 THEN R=P+M
260 IF H=1 THEN R=P+10*M
280 IF L=0 AND G(R)<>0 THEN W=W+1
290 IF L=1 THEN G(R)=E
300 NEXT M
305 IF W>0 AND W<10 THEN 190
306 IF W=10 THEN 140
310 IF L=1 THEN 400
320 L=1
330 GOTO 250
400 F=F+1
410 IF F<4 THEN E=3
420 IF F>3 AND F<7 THEN E=2
430 IF F>6 THEN E=1
440 IF F=11 THEN 700
445 GOTO 190
450 PRINT@435,"    ";:INPUTS
458 IF S<11 THEN 450
460 IF S>99 THEN 450
465 T=INT((S)/10)
470 U=S-T*10
472 IF G(S)=5 THEN 450
475 IF G(S)=4 THEN S1$="B"
480 IF G(S)=3 THEN S1$="C"
485 IF G(S)=2 THEN S1$="D"
490 IF G(S)=1 THEN S1$="S"
495 IF G(S)=0 THEN S1$="*"
500 V=U*2+T*32+101
510 PRINT@V,S1$
520 C=C+1
530 IF G(S)>0 THEN D=D+1
535 G(S)=5
540 PRINT@418,"SHOTS:";C;
550 IF D<20 THEN 450
560 IF A<82 THEN PRINT@457,"BEST SCORE:";A
570 IF C<A THEN A=C
580 PRINT@482,"ANOTHER GAME?>>Y=YES  N=NO<<";
585 K$=INKEY$
590 I$=INKEY$:IF I$=""THEN590
595 IF I$="Y"THEN120
597 IF I$="N"THENCLS:END
600 IF I$<>"Y"THEN 585
610 IF I$=<>"N"THEN 585
700 CLS:PRINT@39,"***BATTLESHIPS***"
720 PRINT:PRINTTAB(7)"1 2 3 4 5 6 7 8 9"
730 FOR N=1 TO 9
740 PRINTTAB(4);N;". . . . . ."
750 NEXT N
760 GOTO 450
```